JBL PROFESSIONAL

3 SERIES MkIII

POWERED STUDIO MONITORS

Owner's Manual

305P MkIII · 306P MkIII · 308P MkIII · 310S MkIII



Product Registration

Thank you for your purchase of JBL 3 Series MkIII Studio Monitors.

To receive important information as it becomes available, please take a moment to register your 3 Series MkIII speakers at **www.jblpro.com/registration**.

This manual covers all four models in the 3 Series MkIII family: the 305P MkIII, 306P MkIII, and 308P MkIII Powered Studio Monitors, and the 310S MkIII Powered Studio Subwoofer. Where a procedure or specification differs between models, the model is identified.

Table of Contents

Section 1: Important Safety Instructions 5
FCC and Canada EMC Compliance Information 6
EU Compliance Information 6

Section 2: Introduction 8
JBL Linear Spatial Reference (LSR) Design 8
Patented Image Control Waveguide 8
305P, 306P, and 308P MkIII Features 8
310S MkIII Powered Studio Subwoofer Features 9
JBL Professional Reliability 9

Section 3: What's New in the MkIII Generation 10
New Acoustic Platform 10
Front-Firing Slipstream™ Port 10
DSP Room Optimization 10
Neutrik® Combo Input 10
Integrated Mounting 10
Subwoofer Crossover Options 10
Front LED and ErP Standby Defeat 10

Section 4: Setting Up Your System 11
Each 3 Series MkIII Carton Includes the Following Items: 11
Unpacking 11
Placement 11
Mounting the Monitors 13
Audio Connections 14
310S MkIII Powered Studio Subwoofer Connections 14
Power Connections 15
Making Sound 15

Section 5: 305P, 306P, and 308P MkIII Powered Studio Monitors 16
Features 16
Input Panel 16
Audio Connections 17

Section 6: DSP Room Optimization 18
How the Controls Work 18
Monitor Setup 18
Wall Distance 18
LF Adjust 18
HF Adjust 18
Factory Default Settings 19
Recommended Starting Points 20

Section 7: 310S MkIII Powered Studio Subwoofer 21
Features 21
Input Panel 21
Audio Connections 22
Setting the Subwoofer Level 23
Placement and Polarity Setting 23
Crossover Settings and Bass Management 23
Surround, Immersive, and LFE Applications 23

Section 8: System Connections 25
Two-Channel Systems 25
2.1 Systems 25
Surround and Immersive Systems 26

Section 9: Front LED and ErP Standby Mode 27
About ErP Standby 27
About the Front LED 27
Changing the Settings 27
Confirming the Result 28

Section 10: Troubleshooting 29

Section 11: Specifications 30

Section 12: JBL Service Contact Information 32

Section 13: Product Warranty Information 33
Who Is Protected by This Warranty? 33
What Does the JBL Warranty Cover? 33
Who Pays for What? 33
How to Obtain Warranty Performance 33
Limitation of Implied Warranties 33
Exclusion of Certain Damages 33

IMPORTANT SAFETY INSTRUCTIONS

1. READ, KEEP, and FOLLOW all instructions. HEED all warnings.
2. DO NOT use this apparatus near water.
3. CLEAN ONLY with dry cloth.
4. DO NOT expose this apparatus to dripping or splashing and ensure that no objects filled with liquids, such as vases, are placed on the apparatus.
5. DO NOT expose this apparatus to rain or moisture.
6. DO NOT install near any heat sources such as radiators, heat registers, stoves, or other apparatus that produce heat.
7. PROTECT the power cord from being walked on or pinched, particularly at plugs, convenience receptacles, and the point where they exit from the apparatus.
8. ONLY USE attachments/accessories specified by the manufacturer.
9. CAUTION: Use only with a cart, stand, tripod, bracket, or table specified by the manufacturer, or sold with the apparatus. When a cart is used, use caution when moving the cart/apparatus combination to avoid injury from tip-over. Use with other equipment or carts may result in instability causing injury.
10. UNPLUG this apparatus during lightning storms or when unused for long periods of time.
11. REFER all servicing to qualified service personnel. Servicing is required when the apparatus has been damaged in any way, such as power-supply cord or plug is damaged, liquid has been spilled or objects have fallen into the apparatus, the apparatus has been exposed to rain or moisture, does not operate normally, or has been dropped.
12. To completely disconnect this apparatus from the AC Mains, disconnect the power supply cord plug from the AC receptacle.
13. DO NOT overload wall outlets or extension cords beyond their rated capacity as this can cause electric shock or fire.
14. Follow all locally applicable laws, codes and regulations when installing, powering, operating or servicing the product.
15. Install and operate only as directed or a safety hazard could be created.

WATCH FOR THESE SYMBOLS:



The exclamation point, within an equilateral triangle, is intended to alert the user to the presence of important operating and maintenance (servicing) instructions in the literature accompanying the product.



The lightning flash with arrowhead symbol within an equilateral triangle is intended to alert the user to the presence of uninsulated “dangerous voltage” within the product’s enclosure that may be of sufficient magnitude to constitute a risk of electrical shock to persons.



Read manual before use.



High sound pressure. Hearing damage risk. Do not listen at high volume levels for long periods.

WARNING: *To be installed by instructed or skilled persons only.*

WARNING: *No naked flame sources – such as lighted candles – should be placed on the product.*

WARNING: To reduce the risk of fire or electric shock, if the product is equipped with a detachable power cord, use only the type provided, or specified by the manufacturer or your local distributor.

WARNING: *Equipment shall be connected to a MAINS socket outlet with a protective earthing connection.*

CAUTION: *To reduce the risk of electric shock, grounding of the center pin of this plug must be maintained.*

WARNING: *This product is intended to be operated ONLY from voltages that complies with local building and*

electrical codes listed on the back panel or the recommended or included power supply of the product. Operation from other voltages other than those indicated may cause irreversible damage to the product and void the products warranty. The use of AC Plug Adapters is cautioned because it can allow the product to be plugged into voltages in which the product was not designed to operate. If you are unsure of the correct operational voltage, please contact your local distributor and/or retailer.



WARNING: *Do Not Open! Risk of Electrical Shock. Voltages in this equipment are hazardous to life. No user-serviceable parts inside. Refer all servicing to qualified service personnel.*

Place the equipment near a main power supply outlet and make sure that you can easily access the power breaker switch.

FCC AND CANADA EMC COMPLIANCE INFORMATION:

This device complies with part 15 of the FCC Rules. Operation is subject to the following two conditions:

(1) This device may not cause harmful interference, and (2) this device must accept any interference received, including interference that may cause undesired operation.

CAN ICES (B) / NMB (B)

FCC SDOC SUPPLIER'S DECLARATION OF CONFORMITY:

HARMAN Professional, Inc. hereby declares that this equipment is in compliance with the FCC part 15 Subpart B.

NOTE: This equipment has been tested and found to comply with the limits for a Class B digital device, pursuant to part 15 of the FCC Rules. These limits are designed to provide reasonable protection against harmful interference in a residential installation. Thips equipment generates, uses and can radiate radio frequency energy and, if not installed and used in accordance with the instructions, may cause harmful interference to radio communications. However, there is no guarantee that interference will not occur in a particular installation. If this equipment does cause harmful interference to radio or television reception, which can be determined by turning the equipment off and on, the user is encouraged to try to correct the interference by one or more of the following measures:

- *Reorient or relocate the receiving antenna.*
- *Increase the separation between the equipment and receiver.*
- *Connect the equipment into an outlet on a circuit different from that to which the receiver is connected.*
- *Consult the dealer or an experienced radio/TV technician for help.*

Approved under the verification provision of FCC Part 15 as a Class B Digital Device.

CAUTION: Changes or modifications not expressly approved by the manufacturer could void the user's authority to operate this device.

EU COMPLIANCE INFORMATION:

ErP (Ecodesign):

The power consumption in

- off mode: 0 W
- standby mode: 0.4 W.

The product will automatically switch into standby mode when the product is not providing a main function over 18 minutes.

WEEE NOTICE:



This product must not be disposed of as unsorted waste. Please use designated collection systems or return it to your supplier for recycling. The crossed-out wheeled bin symbol indicates that separate collection is required.

If you have questions about how to install or operate the product, please contact Harman Professional, Inc.

Technical support:

Technical support in North America, please contact: HProTechSupportUSA@harman.com Phone: (844) 776-4899
Technical support outside North America, please contact your local distributor.

HARMAN Professional, Inc.
8500 Balboa Blvd., Northridge, CA 91325, USA

EU: HARMAN Professional Denmark ApS
Olof Palmes Allé 44, 8200 Aarhus N, Denmark

UK: HARMAN Professional Solutions
2 Westside, London Road, Apsley, Hemel Hempstead, HP3 9TD, UK

CE UKCA

Section 2: Introduction

Congratulations on your purchase of JBL Professional 3 Series MkIII Studio Monitors. The 3 Series MkIII meets JBL's high standards for accuracy and long-term reliability in demanding professional applications. All 3 Series MkIII models incorporate JBL Professional transducer, waveguide, and digital signal processing technologies to provide accurate frequency response, exceptional low-frequency extension, and high SPL capability. JBL design ensures greater accuracy at the mix position in acoustically varied workspaces and production environments.

PATENTED IMAGE CONTROL WAVEGUIDE

JBL's patented Image Control Waveguide gives the 3 Series MkIII Powered Studio Monitors remarkable imaging, a wide soundstage, and a solid "phantom center." Subtle details can be heard, even in a dense mix. As an added benefit, the Image Control Waveguide provides a broad "sweet spot" with consistent 120° x 90° coverage, so you don't have to be seated directly in front of the speakers to hear accurate, natural, and open sound.

305P, 306P, AND 308P MkIII FEATURES

3 Series MkIII models include a range of features to meet the needs of demanding audio production applications:

- Newly designed low-frequency transducers deliver higher output, lower distortion, and controlled bass extension — to 45 Hz on the 305P MkIII, 43 Hz on the 306P MkIII, and 41 Hz on the 308P MkIII (-10 dB).
- New high-performance 25 mm (1 in) soft dome high-frequency transducers deliver accurate high-mid detail, faster transients, and smooth response extending to 38 kHz on the 305P MkIII, 38 kHz on the 306P MkIII, and 40 kHz on the 308P MkIII (-10 dB).
- JBL's patented Slipstream™ low-frequency port, now front-firing, works in concert with the woofer to produce deep bass response at any playback level. The double-flared shape of the port is precisely engineered for greater low-frequency extension and reduced turbulence. Front-firing placement significantly reduces boundary interference when the monitors are placed on a desk, on a shelf, or close to a wall.
- The bi-amplified design, with individual power amplifiers for the low-frequency and high-frequency transducers, uses efficient high-output Class D integrated power amplifiers to provide high SPL (sound pressure level) with ultra-low self-noise. The 305P MkIII delivers 86 W total (43 W LF + 43 W HF); the 306P MkIII and 308P MkIII each deliver 110 W total (55 W LF + 55 W HF).
- Corrective EQ with 81 configurable room tuning combinations, set from four push-button DSP controls on the rear panel: Monitor Setup, Wall Distance, LF Adjust, and HF Adjust. Settings are retained in memory through power cycles. See Section 6, "DSP Room Optimization."
- A single Neutrik® combo input connector accepts balanced XLR, balanced 6.35 mm (¼-inch) TRS, and unbalanced 6.35 mm (¼-inch) TS connections.
- A +4dBu / -10dBV INPUT SENSITIVITY switch allows connection to consumer-grade or high-output professional equipment without danger of input overload.
- A detented VOLUME attenuator allows fine adjustment of levels for a broad range of signal sources.
- M4 mounting points — four on the top panel and four on the bottom panel, in a 75 x 75 mm pattern — support elevated, inverted, wall, and ceiling installations for immersive and spatial audio production.
- Selectable front LED defeat and ErP standby defeat for dark control rooms, video production environments, and installations that require the monitors to remain powered. See Section 9.

310S MkIII POWERED STUDIO SUBWOOFER FEATURES

Producing extended low-frequency response into the 26 Hz region, the 310S MkIII is the ideal match for the 3 Series MkIII studio monitors. The 310S MkIII feature set includes:

- A newly designed, down-firing 250 mm (10 in) high-excursion low-frequency transducer with an advanced magnetic system for greater output, lower distortion, and deeper extension.
- A 300-watt Class D power amplifier with abundant output and dynamic headroom for the most demanding production styles.

- The patented Slipstream™ low-frequency port, designed to work in concert with the 310S MkIII woofer for accurate bass response at all playback levels.
- A detented VOLUME control, making it easy to balance the 310S MkIII with the studio monitor system.
- Left and right Neutrik® combo input connectors accepting balanced XLR and balanced or unbalanced 6.35 mm (¼-inch) connections.
- Left and right XLR output connectors to add the 310S MkIII to any studio monitor system and extend its low-frequency response.
- A +4dBu / -10dBV INPUT SENSITIVITY switch for connection to consumer or high-output professional equipment without danger of input overload.
- Four user-selectable CROSSOVER settings — 80 Hz, 100 Hz, 120 Hz, and External — set from a single push-button control.
- Selectable 0° / 180° POLARITY to optimize the blend of the subwoofer with the main monitors.
- A protective limiting circuit allows the subwoofer to operate continuously at full output without failure.
- Selectable front LED defeat and ErP standby defeat, matching the behavior of the 3 Series MkIII monitors. See Section 9.

JBL PROFESSIONAL RELIABILITY

Prior to becoming a production-ready design, each 3 Series MkIII model is subjected to JBL's tough 100-hour power test, in which the speaker is required to play continually at full output for 100 hours without failure. This demanding test ensures the 3 Series MkIII speakers will deliver years of reliable performance. To get the most out of the JBL 3 Series MkIII, please review this owner's manual and keep it on hand for future reference. Also, please register your new speakers at *www.jblpro.com/registration*.

Section 3: What's New in the MkIII Generation

The 3 Series MkIII platform introduces acoustic, electronic, and mechanical improvements over the MkII generation. If you are familiar with 3 Series MkII monitors, the following summary describes what has changed and how it affects setup.

NEW ACOUSTIC PLATFORM

The high-frequency and low-frequency transducers are completely new designs. The redesigned soft dome high-frequency driver delivers accurate high-mid detail with response extending beyond the audible band, improving the reproduction of transients and spatial cues. The redesigned low-frequency driver combines an improved suspension and a larger magnetic system for higher output, lower distortion, and deeper extension.

Combined with the patented Image Control Waveguide and the patented Slipstream™ port, the MkIII acoustic platform delivers greater peak SPL and lower self-noise than the corresponding MkII models, while preserving the neutral tonal balance that makes mixes translate.

FRONT-FIRING SLIPSTREAM™ PORT

The low-frequency port has moved from the rear panel to the front baffle. Relocating the port to the front significantly reduces the boundary interference that occurs when a rear-ported monitor is placed close to a wall or against the back of a desk. The result is more consistent, more predictable bass response in real-world workspaces — particularly desktop and shelf installations where placement options are limited.

DSP ROOM OPTIMIZATION

Where MkII monitors provided two analog switches (Boundary EQ and HF Trim), MkIII monitors provide four push-button DSP controls: Monitor Setup, Wall Distance, LF Adjust, and HF Adjust. Together they create 81 room tuning combinations, allowing the monitor to be matched to its physical mounting condition, its distance from the nearest wall, and your tonal preference. Settings are stored in nonvolatile memory and are retained through power cycles. Section 6 covers these controls in detail.

NEUTRIK® COMBO INPUT

The separate XLR and ¼-inch input connectors of the MkII generation are replaced by a single Neutrik combo connector on each monitor, accepting balanced XLR, balanced ¼-inch TRS, or unbalanced ¼-inch TS plugs. This removes the possibility of connecting two sources to one monitor at the same time.

INTEGRATED MOUNTING

MkIII monitors include eight M4 mounting points — four on the top panel and four on the bottom panel — arranged in a 75 x 75 mm pattern. These allow the monitors to be safely mounted upright, inverted, or on brackets for wall, ceiling, and stand installations, supporting height channels and other immersive and spatial audio production formats.

SUBWOOFER CROSSOVER OPTIONS

The 310S MkIII replaces the MkII subwoofer's XLF setting with additional selectable crossover frequencies. Four settings are now available — 80 Hz, 100 Hz, 120 Hz, and External — accommodating a wider range of main monitor sizes and external bass management systems.

FRONT LED AND ErP STANDBY DEFEAT

All MkIII models allow the front-panel LED and the ErP automatic standby function to be defeated by the user, using rear panel button combinations held during power-on. These procedures are described in Section 9.

Section 4: Setting Up Your System

EACH 3 SERIES MkIII CARTON INCLUDES THE FOLLOWING ITEMS:

- One 3 Series MkIII studio monitor or 3 Series MkIII subwoofer
- One power cord
- Quick Start Guide
- Four peel-off rubber pads (305P, 306P, and 308P MkIII models only)

UNPACKING

When removing a speaker from its packaging, we recommend the following procedure, which will prevent damage to the high-frequency transducer:

305P, 306P, and 308P MkIII models:

1. Remove the outer shipping carton, if one exists.
2. Place the inner carton on the floor with the top facing upward.
3. Open the top of the box.
4. Without removing the internal packaging end-cap, gently rotate the carton so the open end rests on the floor and the bottom of the carton is facing you.
5. Gently lift the carton and allow the speaker and protective end-cap to slide out of the carton and remain on the floor.
6. Save the cartons and use the above procedure in reverse when you want to repack the units for shipment.

310S MkIII subwoofer — The subwoofer weighs 22.8 kg (50.3 lbs) as shipped. Unpacking the subwoofer does not require you to lift the subwoofer. However, you will need to rotate the subwoofer in the carton. If you are unable to perform the following steps without assistance, please request help from another person.

1. Remove the outer shipping carton, if one exists.
2. Place the carton on the floor with the bottom facing upward.
3. Open the bottom flaps of the carton and remove any protective packing materials from the bottom of the subwoofer. Open the bag that protects the subwoofer to expose the subwoofer's four feet.
4. Gently rotate the carton so the bottom is facing the floor and the four feet of the subwoofer are in contact with the floor.
5. Gently lift the carton and allow the subwoofer and protective packing materials to slide out and remain on the floor.
6. Remove the protective packing materials and documentation from the top of the subwoofer. Save the carton and use the above procedure in reverse when you want to repack the unit for shipment.

PLACEMENT

3 Series MkIII Studio Monitors are designed to deliver exceptional imaging in any room. To get the most out of your speakers, follow these recommendations:

- Locate the four self-adhesive pads supplied with the 305P, 306P, and 308P MkIII speakers. Position and attach these to the bottom surface of the speaker close to each corner. The pads protect the finish of the speaker and reduce vibration transfer into the supporting surface.
- Position each 305P, 306P, or 308P MkIII Studio Monitor in a vertical orientation with the tweeter on top. Vertical orientation eliminates phase shift and acoustic cancellation of frequencies that can occur when the distance of the woofer to the ear is different from the distance of the tweeter to the ear.
- Angle the speakers so the high-frequency transducer in each speaker is aimed directly toward the ear of the listener. In a typical stereo setup this places each monitor approximately 30° off the centerline of the listening position.

- Ideally, 3 Series MkIII Studio Monitors should be placed on suitable speaker stands, rather than on the work surface. This will reduce resonance and deterioration of low-frequency performance caused by the speaker's mechanical coupling with the work surface.
- For optimum imaging, the left and right speakers should be placed symmetrically in the room, so each speaker is the same distance from adjacent walls and reflective surfaces.
- The speakers should be placed so the position of the listener and the two speakers form an equilateral triangle. Adjusting the distance between the speakers will affect the quality of bass heard at the listening position. You can experiment with speaker placement to find the placement that produces the preferred bass response, imaging, and — when listening to stereo material — produces a strong "phantom center," in which vocals and some instruments seem to originate from a point between speakers.
- The listening distance can be determined according to your preference, the acoustics of your room, and the maximum SPL (sound pressure level) you want to hear at the listening position. You can find the speaker's maximum SPL at 1 meter in the Specifications section at the end of this manual. Each doubling of listening distance will reduce the SPL at the listening position by as much as 6 dB in an acoustically absorptive room, but only 3 or 4 dB in an acoustically reflective room.
- After placement is set, use the MONITOR SETUP and WALL DISTANCE controls described in Section 6 to match the monitor's response to its physical situation.

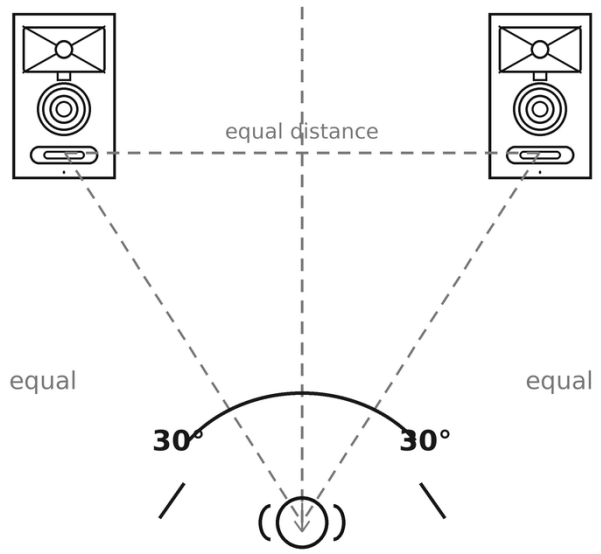

Figure 4-1. Stereo monitor placement.

310S MkIII subwoofer placement: The low-frequency driver of the 310S MkIII is mounted on the bottom panel of the subwoofer. Before placing the subwoofer, make sure the position on the floor is free of any large objects that can interfere with or damage the woofer.

In a stereo system, the 310S MkIII subwoofer should be placed directly on the floor, located between the left and right speakers. In a surround sound system, the subwoofer can be located between the left and center or between the right and center channel speakers. The distance of the subwoofer from the listening position can be adjusted to produce the optimum bass in the system. Placing the subwoofer close to a wall or in a corner generally will increase the amount of bass heard in the room. Experiment to determine the subwoofer placement that produces the best balance and quality of bass in the system.

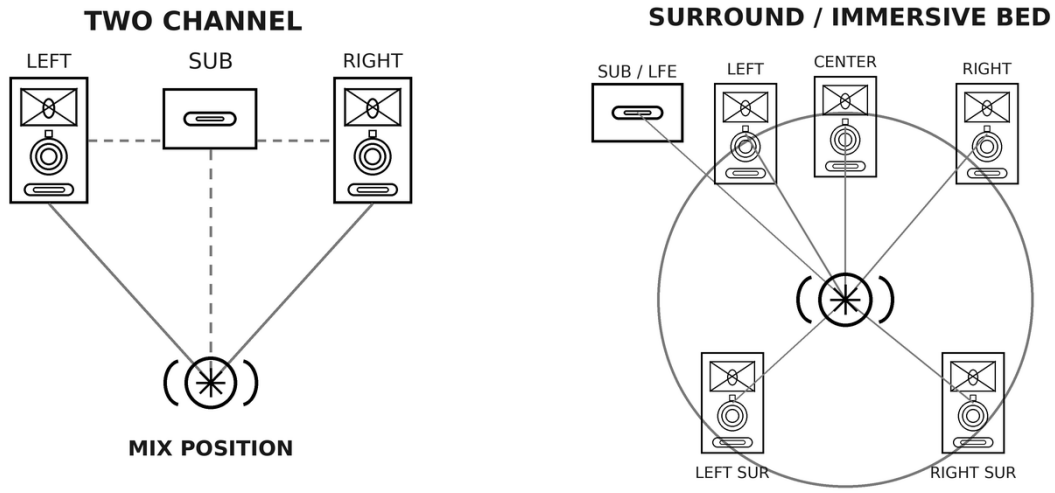

The 310S MkIII may be placed between the left and center, or the right and center, channel positions.

Figure 4-2. Subwoofer placement in two-channel and surround systems.

MOUNTING THE MONITORS

305P, 306P, and 308P MkIII monitors include eight M4 threaded mounting points — four on the top panel and four on the bottom panel — arranged in a 75 x 75 mm pattern. These allow the use of commercially available 75 brackets, wall mounts, ceiling mounts, and stand adapters for upright, inverted, wall, and ceiling installations.

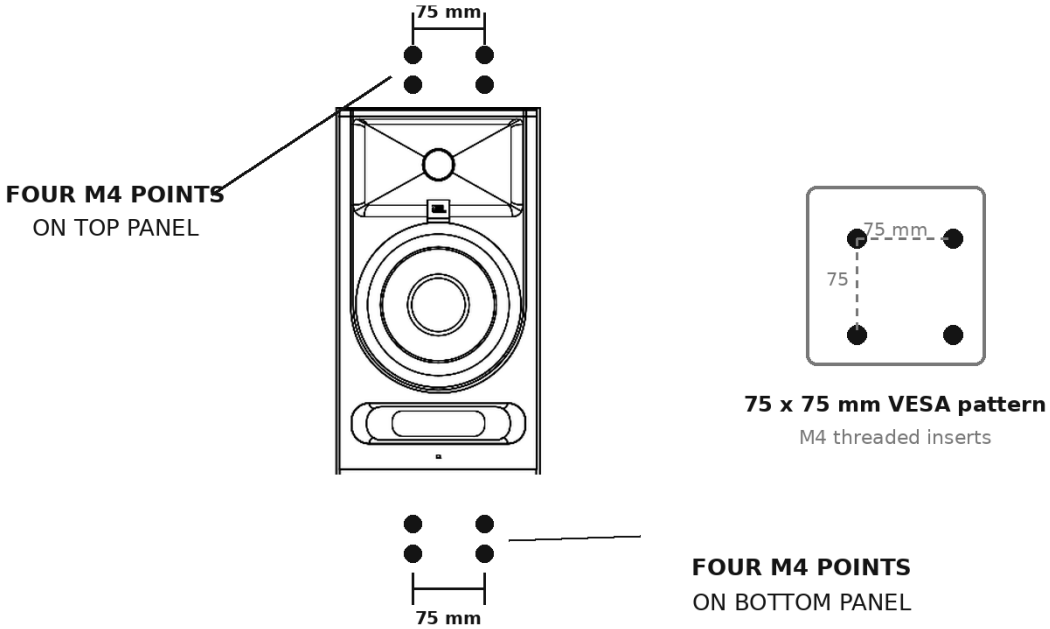

Eight M4 mounting points - four on the top panel, four on the bottom - in a 75 x 75 mm VESA-compatible pattern.

Figure 4-3. M4 mounting points and the 75 x 75 mm pattern.

Observe the following requirements when mounting 3 Series MkIII monitors:

- Mounting must be performed by a qualified installer. Overhead installations must comply with all applicable local building and safety codes.
- Select mounting hardware rated for at least the net weight of the monitor being mounted, with an appropriate safety factor. Net weights are listed in Section 11, "Specifications."
- Use only M4 screws of a length appropriate to the bracket being fitted. Screws that are too long can damage internal components. Do not exceed the thread engagement specified by the bracket manufacturer.

- Attach brackets to structurally sound building elements — studs, joists, or engineered anchors — never to drywall or ceiling tile alone.
- Where required by local code, or in any overhead installation, fit a secondary safety attachment such as an aircraft cable safety tether.
- When a monitor is mounted in an inverted orientation, the vertical driver relationship is preserved; the tweeter is simply below the woofer. Aim the high-frequency transducer toward the listening position and set MONITOR SETUP to BRACKET.
- Ensure that the front-firing Slipstream™ port remains unobstructed after mounting.
- Route and secure the power cord and audio cable so they cannot place tension on the connectors or the mounting hardware.

AUDIO CONNECTIONS

NOTE: Before making audio connections, ensure the VOLUME control on each 3 Series MkIII speaker/subwoofer is set to the full counter-clockwise (minimum) position, and that the POWER switch on each speaker is set to OFF.

Each 3 Series MkIII monitor is equipped with a single Neutrik combo input connector that accepts balanced XLR, balanced 6.35 mm (¼-inch) TRS, and unbalanced 6.35 mm (¼-inch) TS plugs. This connector interfaces with professional computer audio interfaces, mixing consoles, and audio production equipment, as well as unbalanced consumer audio products such as personal music players, consumer audio receivers, and audiovisual equipment.

Connect professional equipment with balanced outputs to the monitor input using balanced audio cables. Balanced connections offer better rejection of noise and hum, particularly over longer cable runs.

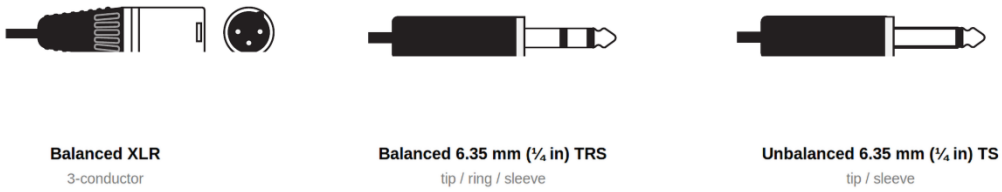

Figure 4-4. Plug types accepted by the BALANCED INPUT connector.

3 Series MkIII speakers are equipped with an INPUT SENSITIVITY switch. Set the switch to the setting that matches the nominal output level of your source equipment:

- Set the switch to **+4dBu** when connecting to professional equipment with a +4dBu nominal output level, such as most audio interfaces, mixing consoles, and monitor controllers. To determine the nominal output level of the connected equipment, consult the documentation supplied with the connected equipment. Also use the +4dBu setting if the sound is distorted even when the speaker VOLUME control is set low.
- Set the switch to **-10dBV** when connecting to consumer-grade equipment, or if the signal level from the source is too low even with the VOLUME control turned up.

NOTE: When using the 310S MkIII in a system with 3 Series MkIII Studio Monitors, set the INPUT SENSITIVITY switch on the 305P, 306P, or 308P MkIII monitors to the -10dBV setting regardless of the 310S MkIII INPUT SENSITIVITY switch setting.

310S MkIII POWERED STUDIO SUBWOOFER CONNECTIONS

The left and right outputs of the signal source should be connected directly to the LEFT IN and RIGHT IN connectors of the subwoofer. The LEFT OUT and RIGHT OUT connectors of the subwoofer should be connected to the inputs of the left and right speakers, respectively.

POWER CONNECTIONS

Connect the included IEC power cable to each 3 Series MkIII speaker and subwoofer. The 3 Series MkIII speakers incorporate a universal power supply, allowing them to be used domestically and internationally. The ground

terminal of the IEC plug is required by wiring codes and regulations and must always be connected to the electrical installation safety ground.

MAKING SOUND

1. Ensure the VOLUME control on each 3 Series MkIII speaker/subwoofer is set to the full counter-clockwise (minimum) position.
2. Power on the connected audio equipment (mixing console, computer audio interface, preamp, etc.).
3. Set the POWER switch on each 3 Series MkIII speaker/subwoofer to the ON position. After a delay of approximately one second, the power indicator on the front of each speaker will illuminate and the speakers will be ready to reproduce audio signals.
4. Play full-range program material from the source with ample low-frequency content so that you can properly judge the bass response of the system. Now slowly advance the volume control of the source device until its nominal operating level is achieved.
5. Slowly increase the VOLUME control on each 3 Series MkIII Studio Monitor until the desired listening level is achieved and all speakers are matched in output level to achieve a balanced image.
6. Balance the subwoofer in the system using the rear panel VOLUME control. Additional balance of bass can be achieved by changing the placement of the subwoofer in the room.
7. Press the DSP control buttons to select the monitor setup and EQ adjustments that achieve the best sound performance for your room. See Section 6, "DSP Room Optimization." The settings are retained through power cycles.

Section 5: 305P, 306P, and 308P MkIII Powered Studio Monitors

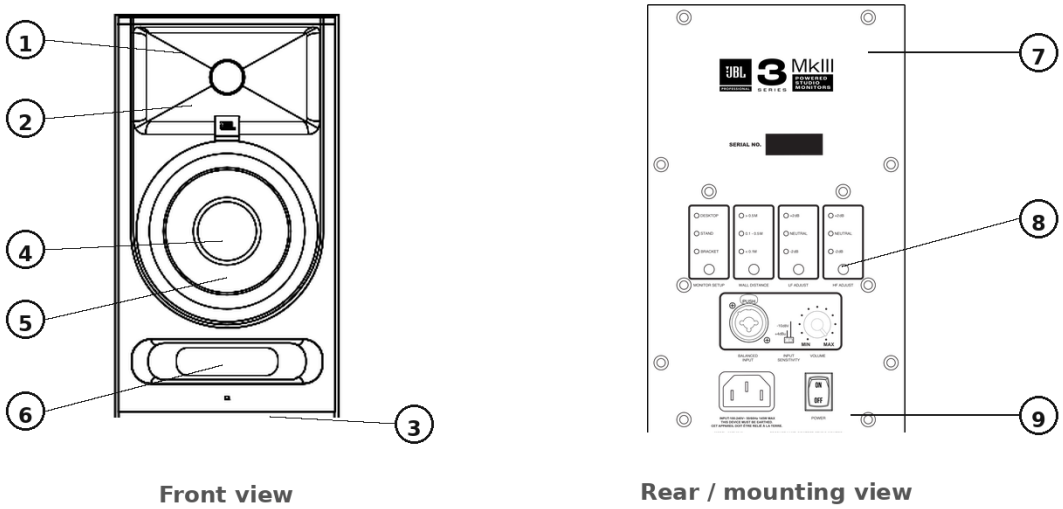

Figure 5-1. Monitor front and back views.

FEATURES

1. HIGH-FREQUENCY TRANSDUCER (TWEETER) – This transducer reproduces high-frequency signals.

2. **IMAGE CONTROL WAVEGUIDE** – The specially designed JBL Image Control Waveguide enhances imaging and optimizes the blend of direct and reflected sound in the room, ensuring neutral sound at the mix position.

3. **POWER LED** – This LED illuminates when power is connected and the POWER switch is set to ON. Note that after turning the power switch to the ON setting, there is a short delay prior to illumination of the LED. The LED can be defeated; see Section 9.

4. LOW-FREQUENCY TRANSDUCER (WOOFER) – This transducer reproduces low frequencies.

5. **DUST DOME** – Protects the inner circuit of the woofer. This self-repairing dust dome is resistant to dents caused by fingers and objects.

6. SLIPSTREAM™ LOW-FREQUENCY PORT – The patented, front-firing Slipstream™ Port works in conjunction with the low-frequency transducer to provide accurate low-frequency performance and reduced boundary interference. Do not obstruct the port.

7. **M4 MOUNTING POINTS** – Four M4 threaded points on the top panel and four on the bottom panel, in a 75 x 75 mm pattern. See "Mounting the Monitors" in Section 4.

8. **INPUT PANEL** – This panel includes the power connector, input connector, DSP controls, and user controls.

9. **PADS** – Four self-adhering pads are supplied with each studio monitor.

INPUT PANEL

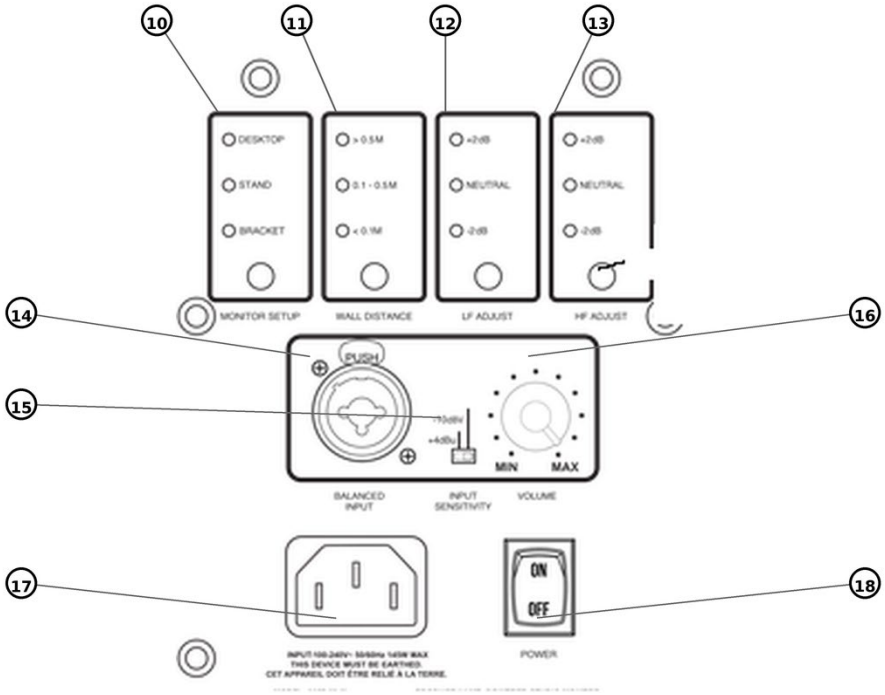

Figure 5-2. Monitor input panel.

10. **MONITOR SETUP** – Selects the tuning that matches how the monitor is physically supported: DESKTOP, STAND, or BRACKET. See Section 6.
11. **WALL DISTANCE** – Selects boundary compensation based on the distance from the monitor to the nearest wall: > 0.5 M, 0.1 – 0.5 M, or < 0.1 M. See Section 6.
12. **LF ADJUST** – Adjusts low-frequency balance by ±2 dB using a 300 Hz low-shelf filter: +2 dB, NEUTRAL, or -2 dB.
13. **HF ADJUST** – Adjusts high-frequency balance by ±2 dB using a 3 kHz high-shelf filter: +2 dB, NEUTRAL, or -2 dB.
14. **BALANCED INPUT** – A Neutrik combo connector. Connect professional equipment using a balanced XLR plug or a balanced 6.35 mm (¼-inch) TRS plug. Connect consumer equipment using an unbalanced 6.35 mm (¼-inch) TS plug.
15. **INPUT SENSITIVITY SWITCH** – Set this switch to +4dBu to protect from overload when connecting to professional equipment and sources with high output level capabilities. Set this switch to -10dBV when connecting to lower-level consumer-grade audio equipment or to the 310S MkIII subwoofer.
16. **VOLUME CONTROL** – Use this detented control to set the maximum listening level.
17. **POWER RECEPTACLE** – Connect the included power cord to this receptacle.
18. **POWER SWITCH** – This switch turns the speaker on or off.

AUDIO CONNECTIONS

Connect the signal source to the BALANCED INPUT connector. The combo connector accepts one plug at a time, so only a single signal source can be connected to each monitor.

Section 6: DSP Room Optimization

Every room is different. The 3 Series MkIII monitors include four push-button DSP controls on the rear panel that allow the monitor's response to be matched to its physical mounting condition, its proximity to walls, and your tonal preference. The four controls provide 81 room tuning combinations.

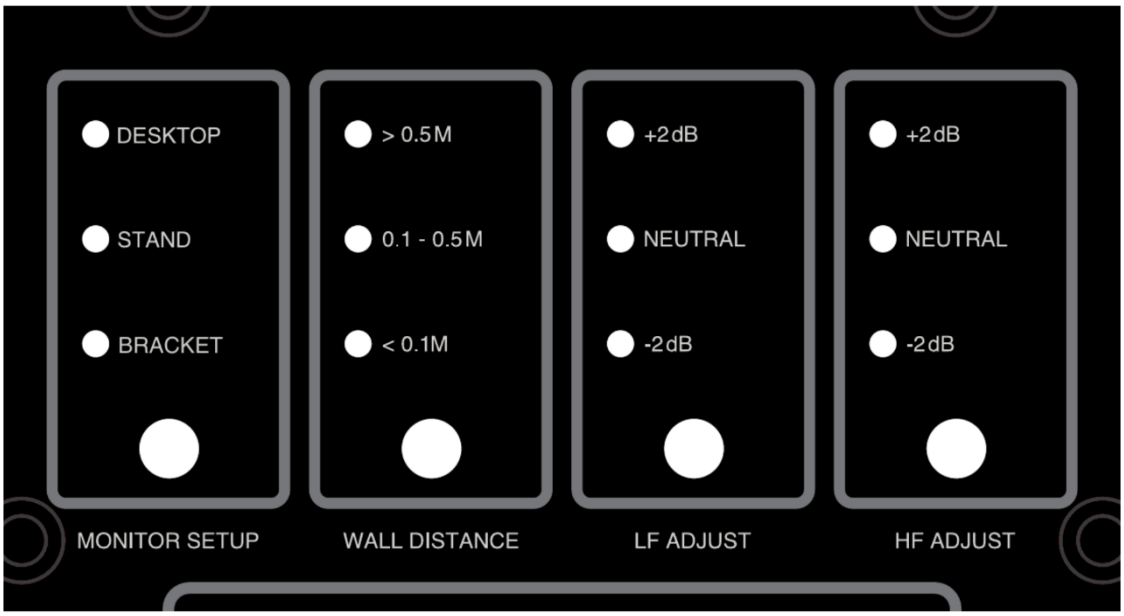

Figure 6-1. The four DSP room optimization controls.

HOW THE CONTROLS WORK

Each control has its own button and a column of indicator LEDs showing the active setting. Press the button to step through the available settings; the LED next to the active setting illuminates. Settings are stored in nonvolatile memory and are retained when the speaker is powered off and on.

Set each monitor in a stereo or multichannel system to the same MONITOR SETUP, LF ADJUST, and HF ADJUST values. WALL DISTANCE may differ between monitors if their distances to the nearest boundary differ — for example, when one monitor sits closer to a side wall than the other.

MONITOR SETUP

MONITOR SETUP compensates for the acoustic effect of how the monitor is physically supported.

Setting	Use when
DESKTOP	The monitor sits on a desk, console meter bridge, or other work surface. Compensates for the reflection and low-frequency reinforcement caused by the surface directly beneath and in front of the monitor.
STAND	The monitor is on a dedicated speaker stand, or otherwise mounted free of large adjacent surfaces. This is the reference condition.
BRACKET	The monitor is mounted on a wall bracket, ceiling mount, or pole, including inverted installations. Compensates for the mounting surface behind or above the monitor.

WALL DISTANCE

WALL DISTANCE applies boundary compensation based on the distance from the rear of the monitor to the nearest wall. Placing a monitor close to a wall reinforces low frequencies; this control corrects that reinforcement so bass remains neutral.

Setting	Distance from monitor to nearest wall
> 0.5 M	More than 0.5 meters (approximately 20 inches). No boundary compensation applied.
0.1 – 0.5 M	Between 0.1 and 0.5 meters (approximately 4 to 20 inches). Moderate low-frequency compensation.
< 0.1 M	Less than 0.1 meters (approximately 4 inches). Maximum low-frequency compensation.

Measure from the rear panel of the monitor to the wall surface behind it. If a monitor is close to both a rear wall and a side wall, select the setting corresponding to the shorter of the two distances.

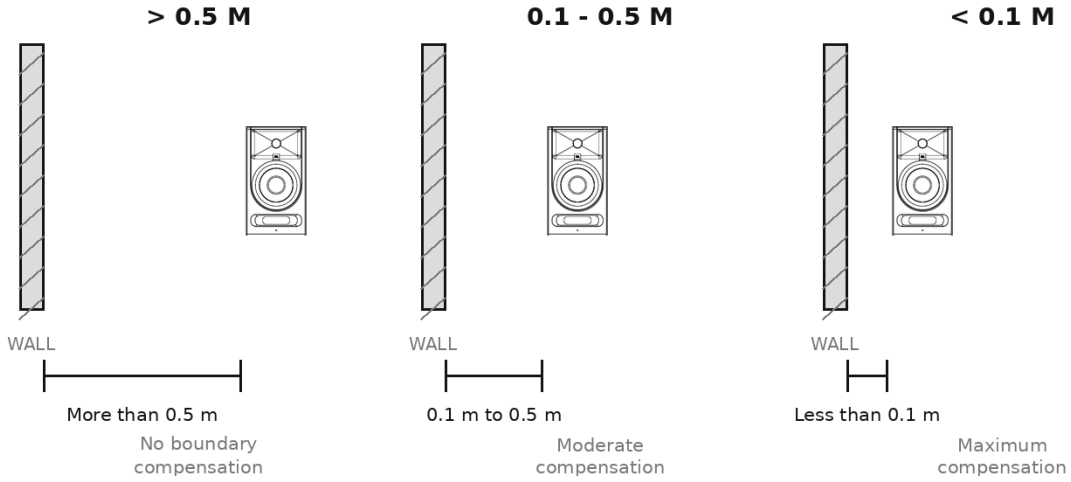

Figure 6-2. WALL DISTANCE settings.

LF ADJUST

LF ADJUST applies a 300 Hz low-shelf filter to tailor the low-frequency balance to your preference and program material.

Setting	Effect
+2 dB	Adds 2 dB below 300 Hz. Adds weight and warmth.
NEUTRAL	Flat reference response. Recommended starting point.
-2 dB	Reduces 2 dB below 300 Hz. Useful in rooms with excess low-frequency energy, or when a subwoofer is carrying the low end.

HF ADJUST

HF ADJUST applies a 3 kHz high-shelf filter to tailor the high-frequency balance to your room and preference.

Setting	Effect
+2 dB	Adds 2 dB above 3 kHz. Useful in acoustically absorptive rooms with significant soft furnishings or heavy treatment.
NEUTRAL	Flat reference response. Recommended starting point.
-2 dB	Reduces 2 dB above 3 kHz. Useful in acoustically reflective rooms with hard, untreated surfaces.

FACTORY DEFAULT SETTINGS

3 Series MkIII products ship from the factory with the following settings:

Control	305P / 306P / 308P MkIII	310S MkIII
Monitor Setup	DESKTOP	—
Wall Distance	> 0.5 M	—
LF Adjust	NEUTRAL	—
HF Adjust	NEUTRAL	—
Crossover	—	80 Hz
Polarity	—	0°
Input Sensitivity	+4dBu	+4dBu
Volume	Center (12 o'clock)	Center (12 o'clock)
AC Power	OFF	OFF
ErP standby	Enabled	Enabled
Front LED	On	On

RECOMMENDED STARTING POINTS

The following combinations are useful starting points. Always trust your ears and familiar reference material over any preset.

Situation	Monitor Setup	Wall Distance	LF Adjust	HF Adjust
Monitors on stands in a treated room	STAND	> 0.5 M	NEUTRAL	NEUTRAL
Monitors on a desk, well away from the wall	DESKTOP	> 0.5 M	NEUTRAL	NEUTRAL
Monitors on a desk against a wall	DESKTOP	< 0.1 M	NEUTRAL	NEUTRAL
Monitors on a shelf close to the wall	DESKTOP	0.1 – 0.5 M	NEUTRAL	NEUTRAL
Wall or ceiling bracket mount	BRACKET	Per measured distance	NEUTRAL	NEUTRAL
Height or overhead channels, immersive rig	BRACKET	Per measured distance	NEUTRAL	NEUTRAL
Bright, reflective room	Per placement	Per measured distance	NEUTRAL	-2 dB
Heavily treated, absorptive room	Per placement	Per measured distance	NEUTRAL	+2 dB
Used with the 310S MkIII subwoofer	Per placement	Per measured distance	NEUTRAL	NEUTRAL

Section 7: 310S MkIII Powered Studio Subwoofer

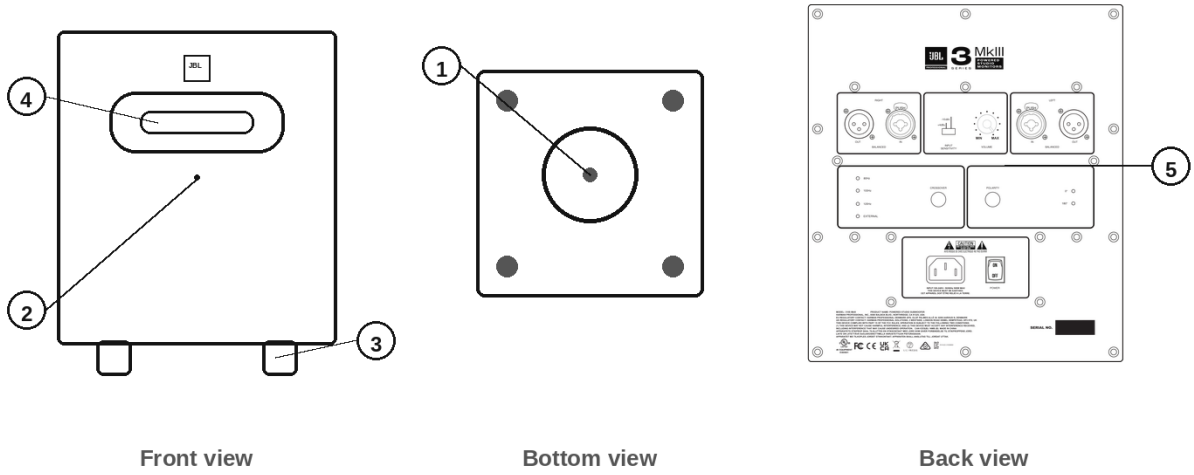

Front view **Bottom view** **Back view**

Figure 7-1. 310S MkIII front, back, and bottom views.

FEATURES

1. **LOW-FREQUENCY TRANSDUCER (WOOFER)** – This down-firing transducer reproduces low-frequency signals.
2. **POWER LED** – This LED illuminates when power is connected and the POWER switch is set to ON. The LED can be defeated; see Section 9.
3. **FEET** – These feet elevate the subwoofer to prevent acoustic coupling with the floor.
4. **SLIPSTREAM™ LOW-FREQUENCY PORT** – This patented port works in conjunction with the low-frequency transducer to provide accurate low-frequency performance.
5. **INPUT PANEL** – This panel includes the power connector, input and output connectors, and user controls.

INPUT PANEL

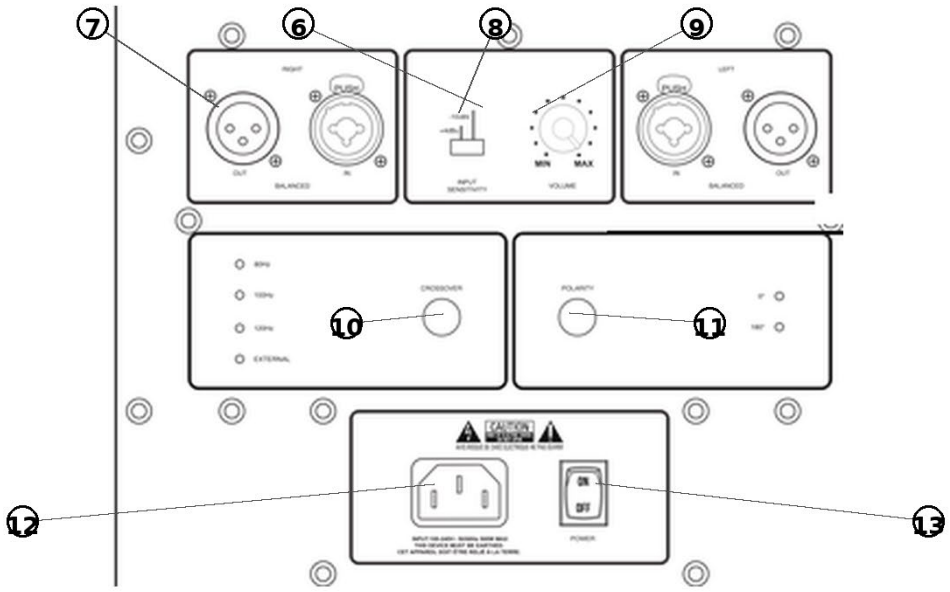

Figure 7-2. 310S MkIII input panel.

6. **RIGHT AND LEFT INPUTS** – Neutrik combo connectors. Connect professional equipment using balanced XLR plugs or balanced 6.35 mm (¼-inch) TRS plugs. Connect consumer equipment using unbalanced 6.35 mm (¼-inch) TS plugs.
7. **RIGHT AND LEFT XLR OUTPUTS** – Connect these outputs to the 3 Series MkIII monitors or other powered speakers in your monitoring system.
8. **INPUT SENSITIVITY SWITCH** – Set this switch to the +4dBu setting when connecting professional equipment and sources with very high output. Set this switch to -10dBV when connecting to lower-level consumer-grade audio equipment.

   NOTE: When the 310S MkIII is used in a system with 3 Series MkIII speakers, set the INPUT SENSITIVITY switch on the 305P, 306P, or 308P MkIII to the -10dBV setting regardless of the 310S MkIII input sensitivity switch setting.
9. **VOLUME CONTROL** – Use this detented control to balance the volume of the subwoofer with the volume of the speakers in the system.
10. **CROSSOVER** – Press this button to step through the four crossover settings: 80 Hz, 100 Hz, 120 Hz, and External. The active setting is shown by the adjacent LEDs. The 80 Hz setting is recommended for use with the 305P, 306P, and 308P MkIII monitors.
11. **POLARITY** – Press this button to select 0° or 180° polarity. Polarity reversal optimizes the blend of the subwoofer with the main speakers according to relative speaker and listening positions. Select the setting that produces the greatest amount of bass when heard at the listening position.
12. **POWER RECEPTACLE** – Connect the included power cord to this receptacle.
13. **POWER SWITCH** – Set this switch to the ON position to operate the subwoofer. Set this switch to the OFF position when the subwoofer is not in use.

AUDIO CONNECTIONS

Connect signal sources to the LEFT and RIGHT INPUT connectors. Each combo connector accepts one plug at a time.

If the 310S MkIII subwoofer is being used to reproduce the .1 LFE channel in a surround sound system, connect the .1 LFE signal to either the LEFT or RIGHT input of the subwoofer.

SETTING THE SUBWOOFER LEVEL

When the 310S MkIII subwoofer is used in a system with 3 Series MkIII Studio Monitors, the ideal balance is achieved when the position of the subwoofer VOLUME control is set to the same position as the main speaker VOLUME controls. However, note that the placement of the speakers in the room can affect the amount of bass heard at the listening position. If more or less subwoofer volume is desired, use the subwoofer VOLUME control to achieve the optimum balance for the application and your preference.

PLACEMENT AND POLARITY SETTING

Because the human ear cannot easily recognize the origin of low-frequency sounds (the sounds are said to be "non-directional"), subwoofer placement is not nearly as critical as main channel speaker positioning. The 310S MkIII is designed to be placed directly on the floor and not elevated or mounted in any way. Set the POLARITY control to the setting that yields a stronger perceived bass response at the listening position.

In a stereo system, the subwoofer should optimally be placed between the two main speakers. In a surround sound system, the subwoofer should be placed between the center and left channel speakers or the center and right channel speakers. Precise central placement is not necessary. Centered positioning in the room can sometimes cause unwanted cancellation of low-frequency content, so it is recommended that the subwoofer be placed slightly off-center and not at the midpoint between the left and right walls.

CROSSOVER SETTINGS AND BASS MANAGEMENT

"Bass management" is a term that refers to the practice of using a subwoofer to reproduce the bass frequencies of the main channels. Because of the physiology of the human ear, low frequencies are largely non-directional. Given an adequate listening distance, we can't easily tell where bass signals are coming from. Thus, it makes little or no difference to the listening experience whether the bass component in a sound comes from the originating speaker — which may be off to your left or right, or even behind you — or from a dedicated subwoofer which is better equipped and better positioned in the room to reproduce low frequencies. For that reason, you may want to use a 310S MkIII subwoofer to reproduce all the bass frequencies in the system.

When using a 310S MkIII subwoofer in the system, bass management is accomplished by simply routing the left and right mix channels to the 310S MkIII inputs and then from the 310S MkIII outputs to the left and right speakers. The frequency at which the subwoofer divides signals to the sub and the left and right speakers can be set using the CROSSOVER control on the input panel of the 310S MkIII.

The 310S MkIII offers four crossover settings:

- **80 Hz** — The recommended setting for use with the 305P, 306P, and 308P MkIII studio monitors. This setting implements high- and low-pass filters to create a seamless blend of the 310S MkIII with the main monitors, providing a smooth transition without audible localization of bass, creating the perception of a full-range system with no subwoofer.
- **100 Hz** — Select this setting when the main speakers have limited low-frequency extension, or when the acoustic conditions at the listening position favor handing off to the subwoofer at a higher frequency.
- **120 Hz** — Select this setting with compact main speakers, or in installations where the main speakers should be relieved of as much low-frequency content as possible to maximize system headroom.
- **External** — The external setting bypasses all internal filtering, allowing use of an external active crossover or the bass management system of a monitor controller or audio interface. Note that when the External option is selected, the XLR LEFT and RIGHT OUT connectors are disabled.

Continuous low-frequency energy with very high peak SPL is made possible by JBL's long-excursion low-frequency driver, working in concert with JBL's patented Slipstream™ Port, and powered by a 300-watt Class D amplifier. A protective circuit allows the 310S MkIII to continuously produce low frequencies at high output levels without failure. In situations where positioning will allow, additional output can be achieved by positioning the 310S MkIII subwoofer adjacent to a wall or at the intersection of two walls.

SURROUND, IMMERSIVE, AND LFE APPLICATIONS

The 310S MkIII subwoofer can be used to reproduce the LFE (Low-Frequency Effects) or .1 channel in a surround sound or immersive audio system. In film production applications, the LFE channel contains low-frequency effects,

such as the sounds of explosions and other sounds with a strong low-frequency component. In music applications, the LFE channel usually contains low-frequency instruments such as bass, bass drum, and synthesizer elements.

In immersive formats that include height channels, the mounting points on the 305P, 306P, and 308P MkIII monitors allow overhead and elevated monitors to be installed with brackets rated for the application. Set MONITOR SETUP to BRACKET on any monitor mounted this way, and observe the mounting requirements in Section 4.

Section 8: System Connections

TWO-CHANNEL SYSTEMS

Connect the left and right outputs of your audio interface, mixing console, or monitor controller directly to the BALANCED INPUT connector on the left and right monitors.

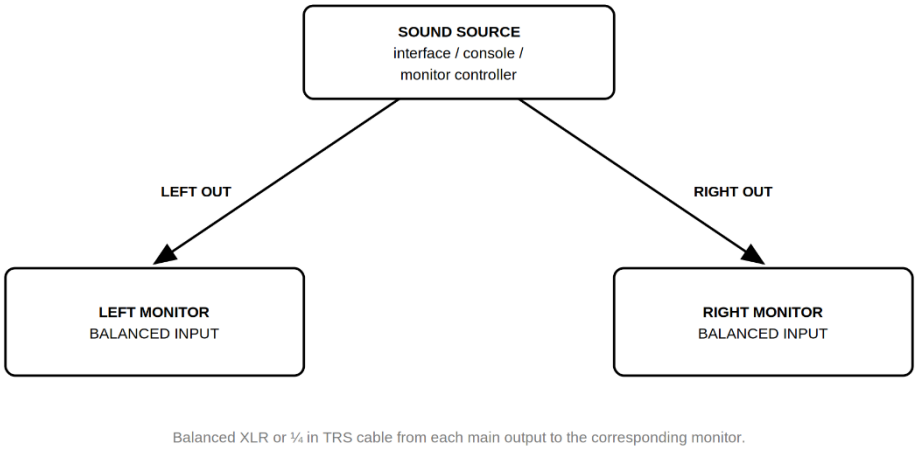

Figure 8-1. Two-channel system connections.

2.1 SYSTEMS

When adding the 310S MkIII to a stereo system, the subwoofer is inserted between the source and the monitors, so that its internal crossover can perform bass management for the system.

1. Ensure that the power ON/OFF switch is set to the OFF position on all speakers.
2. Plug the power cable (IEC) into the power receptacle on all speakers.
3. Connect balanced XLR or TRS cables from the RIGHT and LEFT main outputs of your sound source to the corresponding LEFT LINE INPUT and RIGHT LINE INPUT connectors of the subwoofer.
4. Connect a balanced XLR cable from the LEFT OUT and RIGHT OUT connectors of the subwoofer to the BALANCED INPUT connector on the corresponding left and right monitors.
5. Set the volume of the sound source to zero.
6. Set the INPUT SENSITIVITY switch on the 305P, 306P, or 308P MkIII monitors to -10dBV.
7. Power on all three units.
8. Set the proper crossover frequency and polarity using the CROSSOVER and POLARITY buttons on the subwoofer. The default crossover setting for the 310S MkIII is 80 Hz.
9. Balance the system level as described in "Setting the Subwoofer Level" in Section 7.

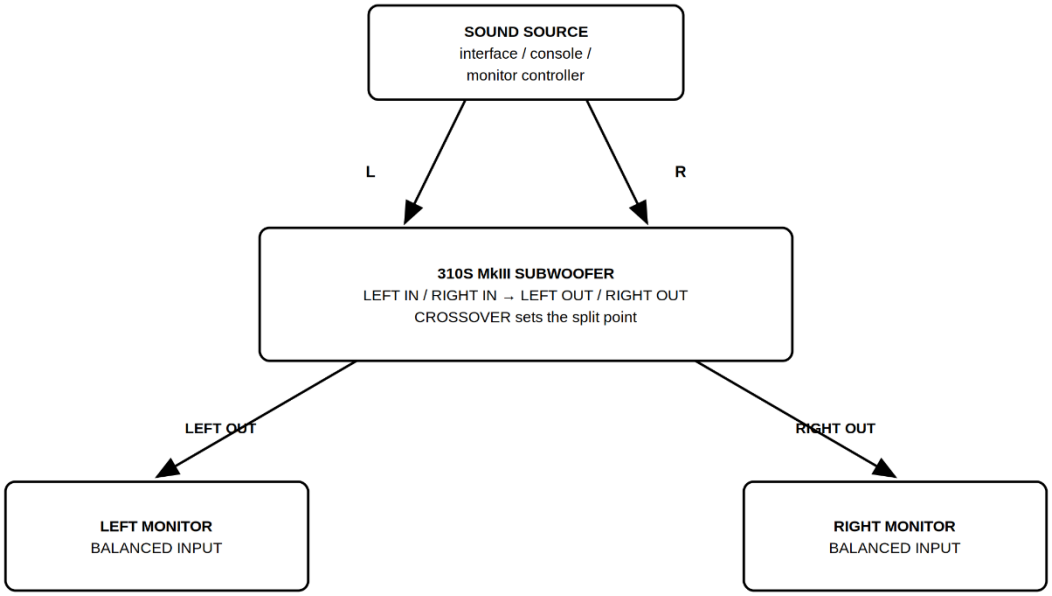

In a 2.1 system the subwoofer sits between the source and the monitors so its crossover can manage bass for the system.

Figure 8-2. 2.1 system connections.

SURROUND AND IMMERSIVE SYSTEMS

In surround and immersive systems, each monitor is connected directly to the corresponding output of the audio interface or monitor controller, and the subwoofer is connected to the LFE or subwoofer output. Bass management is normally handled by the interface, monitor controller, or software; in this case, set the 310S MkIII CROSSOVER control to External.

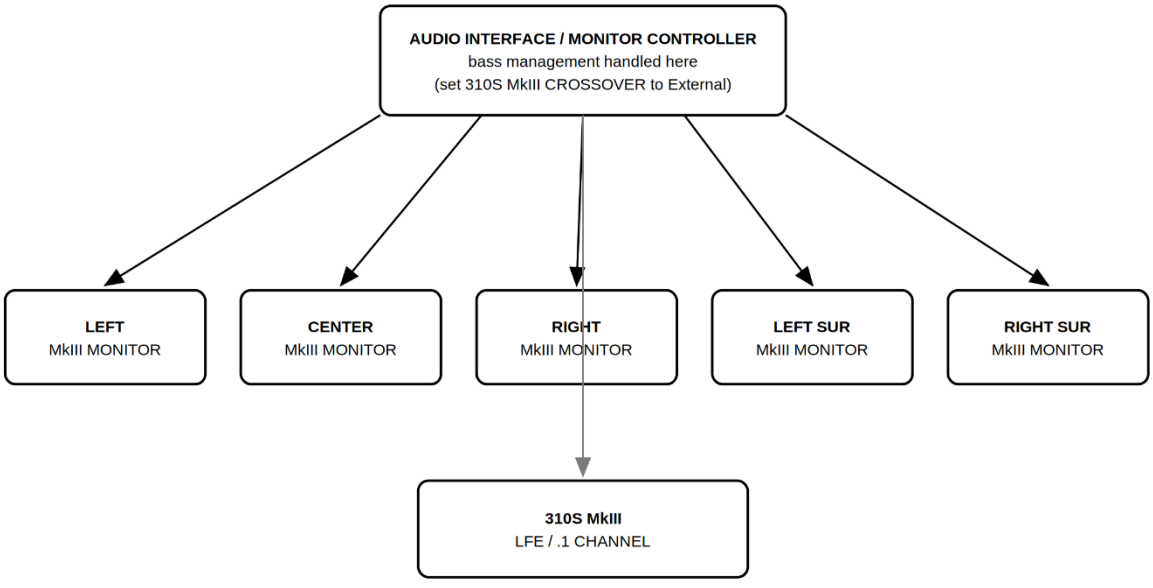

Each monitor connects directly to its channel output; the subwoofer receives the LFE or subwoofer output.

Figure 8-3. Surround and immersive system connections.

Section 9: Front LED and ErP Standby Mode

3 Series MkIII products include two user-defeatable behaviors: the front-panel LED and ErP automatic standby.

ABOUT ErP STANDBY

To comply with European Union Ecodesign (ErP) requirements for energy-related products, 3 Series MkIII speakers automatically enter a low-power standby state after a period with no input signal, and wake automatically when signal returns. ErP standby is enabled from the factory.

Some applications benefit from defeating this behavior — for example, installations where the monitors must remain instantly available, systems fed by very low-level signals, or venues where the wake-up transition is disruptive. Defeating ErP standby increases idle power consumption and may affect regulatory compliance in territories where the Ecodesign requirements apply. Where ErP standby is required by local regulation, leave the function enabled.

ABOUT THE FRONT LED

The front-panel LED indicates that the speaker is powered on. It can be turned off for dark control rooms, video production environments, live streaming setups, and installations where the indicator would be visible to an audience or camera. Defeating the LED does not change any audio behavior.

CHANGING THE SETTINGS

Both functions are changed using rear panel button combinations that are held while the speaker is powered on. The procedure is the same in structure for all models; only the buttons differ.

To change a setting:

1. Set the POWER switch to OFF.
2. Press and hold the button or buttons listed in the table below.
3. While continuing to hold, set the POWER switch to ON.
4. Observe the LED confirmation, then release the buttons.

Model	Function	Buttons to press and hold
305P / 306P / 308P MkIII	Front LED on/off	MONITOR SETUP + WALL DISTANCE
305P / 306P / 308P MkIII	ErP standby enable/disable	LF ADJUST + HF ADJUST
310S MkIII	Front LED on/off	CROSSOVER
310S MkIII	ErP standby enable/disable	POLARITY

305P / 306P / 308P MkIII

Front LED on/off:
hold MONITOR SETUP
+ WALL DISTANCE

ErP standby on/off:
hold LF ADJUST
+ HF ADJUST

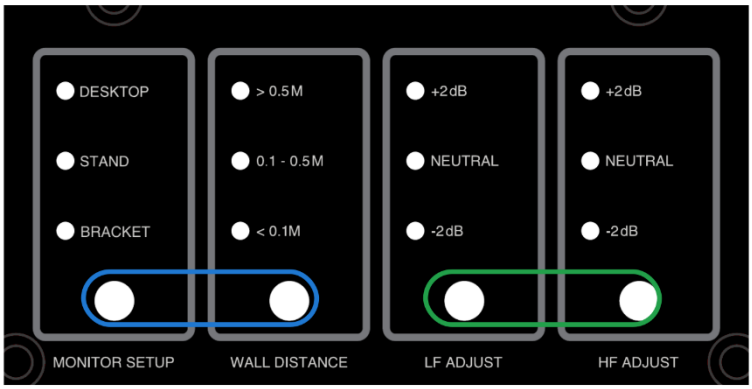

310S MkIII

Front LED on/off:
hold CROSSOVER

ErP standby on/off:
hold POLARITY

Hold, then switch POWER to ON.

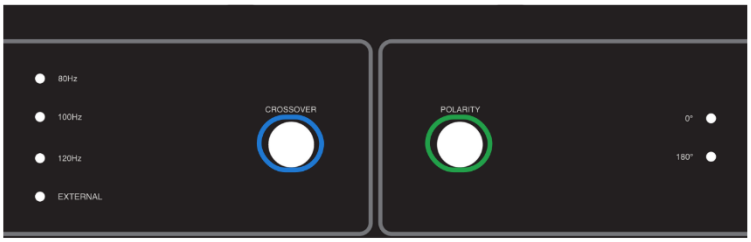

Figure 9-1. Button combinations for front LED and ErP standby.

CONFIRMING THE RESULT

Front LED. The procedure toggles the LED between on and off each time it is performed. The result is visible immediately: the front LED will either illuminate or remain dark once the speaker completes power-on.

ErP standby. The rear panel LEDs confirm the new state:

LED behavior	Meaning
All LEDs flash 3 times	ErP standby **disabled**
All LEDs breathe (slowly fade up and down) 3 times	ErP standby **enabled**

Both settings are stored in nonvolatile memory and are retained when the speaker is powered off and on. In a multi-speaker system, repeat the procedure on each speaker; the settings are per-speaker and are not shared across the system.

Section 10: Troubleshooting

Issue: There is no sound from the speakers.

- Confirm the power cable is connected to the speaker and the POWER switch is set to the ON position.
- Make sure the POWER LED is illuminated on the front of the speaker. If the front LED has been defeated (see Section 9), the LED will remain dark even when the speaker is powered and operating normally.
- Make sure a signal source is connected to the speaker and that it is producing sound.
- Make sure the speaker's VOLUME control is not set to the full counter-clockwise (minimum) position.
- If the system includes a 310S MkIII, confirm the CROSSOVER control is not set to External while relying on the subwoofer's LEFT and RIGHT OUT connectors — those outputs are disabled in the External setting.

Issue: The speakers take a moment to produce sound after a period of silence.

- This is normal ErP standby behavior. The speaker wakes automatically when signal returns. If the delay is disruptive in your application, ErP standby can be defeated; see Section 9.

Issue: The signal is distorted.

- Verify the speaker's INPUT SENSITIVITY switch is set to +4dBu. If the distortion persists, even with the speaker's VOLUME control set low, inspect the gain stages throughout the system to determine which circuit in the signal path is being overdriven.

Issue: The signal level is low.

- Ensure the speaker's VOLUME control is turned up.
- Try setting the speaker's INPUT SENSITIVITY switch to -10dBV.

Issue: The speaker or subwoofer sounds boomy.

- Check the WALL DISTANCE setting against the actual distance from the monitor to the nearest wall, and check that MONITOR SETUP matches how the monitor is supported. A monitor placed close to a wall but set to > 0.5 M will sound bass-heavy.
- If using the 305P, 306P, or 308P MkIII Studio Monitors without the 310S MkIII Studio Subwoofer, try lifting one of the speakers off the supporting surface to see if the boominess is lessened. If it is, the speaker is likely resonating through the surface it is sitting on. Confirm the supplied pads are fitted, and try isolating the speakers using a third-party speaker isolation product.
- Try the -2 dB LF ADJUST setting to determine whether it provides a more natural bass response.
- If using the 310S MkIII Studio Subwoofer, try locating the subwoofer in a different position in the room, away from corners. Try placing the subwoofer at the listening position and walk around the room while listening to the system. When you find a practical position that provides the desired bass response, try placing the subwoofer at that location.

Issue: The system sounds thin, or bass seems to disappear at the listening position.

- Try the alternate POLARITY setting on the 310S MkIII. Select the setting that produces the greatest amount of bass at the listening position.
- Check that the left and right monitors have matching LF ADJUST settings.

Issue: The two monitors do not sound the same.

- Confirm that both monitors have identical MONITOR SETUP, LF ADJUST, and HF ADJUST settings, and that their WALL DISTANCE settings correctly reflect each monitor's actual placement.
- Confirm both monitors have matching INPUT SENSITIVITY switch settings and matching VOLUME control positions.

Issue: The front LED does not illuminate, but the speaker plays normally.

- The front LED has most likely been defeated. Repeat the front LED procedure in Section 9 to turn it back on.

If the above measures do not correct the problem, please contact JBL Professional Customer Service for assistance.

Section 11: Specifications

	305P MkIII	306P MkIII	308P MkIII	310S MkIII
Frequency Response (±3 dB)	55 Hz – 27 kHz	52 Hz – 27 kHz	49 Hz – 27 kHz	27 Hz – 370 Hz
Frequency Range (-10 dB)	45 Hz – 38 kHz	43 Hz – 38 kHz	41 Hz – 40 kHz	26 Hz – 480 Hz
Low-Frequency Extension (-10 dB)	45 Hz	43 Hz	41 Hz	26 Hz
Maximum RMS SPL	97 dB	100 dB	101 dB	104 dB*
Maximum Peak SPL	109 dB	112 dB	113 dB	116 dB*
Crossover	2160 Hz	2040 Hz	1960 Hz	80 / 100 / 120 Hz / External, user selectable
Maximum Peak Input Level (-10dBV / +4dBu)	+7 dBV / +21 dBu	+7 dBV / +21 dBu	+7 dBV / +21 dBu	+7 dBV / +21 dBu
Input Sensitivity (-10dBV input)	92 dB / 1 m	92 dB / 1 m	92 dB / 1 m	92 dB / 1 m
Analog Input Types	1 x Neutrik Combo, balanced	1 x Neutrik Combo, balanced	1 x Neutrik Combo, balanced	2 x Neutrik Combo, balanced (L / R)
Analog Output Types	– – –	– – –	– – –	2 x XLR (L / R)
Input Impedance	20 kΩ	20 kΩ	20 kΩ	20 kΩ
Signal to Noise Ratio	83 dB, A-weighted, relative to 1 W output	83 dB, A-weighted, relative to 1 W output	83 dB, A-weighted, relative to 1 W output	75 dB, A-weighted, relative to 1 W output
Coverage Horizontal x Vertical	120° x 90°	120° x 90°	120° x 90°	– – –
HF Driver Size	25 mm (1 in)	25 mm (1 in)	25 mm (1 in)	– – –
HF Driver Type	Soft dome	Soft dome	Soft dome	– – –
LF Driver Size	127 mm (5 in)	165 mm (6.5 in)	203 mm (8 in)	250 mm (10 in)
Power Configuration	Bi-amplified	Bi-amplified	Bi-amplified	PBTL
HF Driver Power Amp	43 W, Class D	55 W, Class D	55 W, Class D	– – –
LF Driver Power Amp	43 W, Class D	55 W, Class D	55 W, Class D	300 W, Class D
HF Adjust	@ 3 kHz high shelf: -2 dB, 0 dB, +2 dB	@ 3 kHz high shelf: -2 dB, 0 dB, +2 dB	@ 3 kHz high shelf: -2 dB, 0 dB, +2 dB	– – –
LF Adjust	@ 300 Hz low shelf: -2 dB, 0 dB, +2 dB	@ 300 Hz low shelf: -2 dB, 0 dB, +2 dB	@ 300 Hz low shelf: -2 dB, 0 dB, +2 dB	– – –
System Distortion Criteria	<10% THD at maximum output with full compressor / limiter engagement	<10% THD at maximum output with full compressor / limiter engagement	<10% THD at maximum output with full compressor / limiter engagement	– – –
Electrical Distortion Criteria	<0.1% THD @ 1 W output, <1% THD @ full rated output	<0.1% THD @ 1 W output, <1% THD @ full rated output	<0.1% THD @ 1 W output, <1% THD @ full rated output	<0.1% THD @ 1 W output, <1% THD @ full rated output
Sample Rate	192 kHz	192 kHz	192 kHz	192 kHz
OK for Use Near Magnetically Sensitive Equipment	Yes	Yes	Yes	Yes
AC Input Voltage	100–240 VAC (±10%), 50/60 Hz	100–240 VAC (±10%), 50/60 Hz	100–240 VAC (±10%), 50/60 Hz	100–240 VAC (±10%), 50/60 Hz
Enclosure Type	Ported	Ported	Ported	Ported
Enclosure Construction	15 mm MDF	15 mm MDF	15 mm MDF	18 mm MDF
Enclosure Finish	Matte black PVC	Matte black PVC	Matte black PVC	Matte black PVC
Baffle Construction	Injection-molded structural ABS, UL 94 V-0	Injection-molded structural ABS, UL 94 V-0	Injection-molded structural ABS, UL 94 V-0	Injection-molded structural ABS, UL 94 V-0
Rear Panel Construction	2 mm SPCC	2 mm SPCC	2 mm SPCC	2 mm SPCC
Mounting Points	M4 x 8 (4 on top, 4 on bottom), 75 x 75 mm	M4 x 8 (4 on top, 4 on bottom), 75 x 75 mm	M4 x 8 (4 on top, 4 on bottom), 75 x 75 mm	– – –
Cabinet Dimensions	320 x 175 x 250 mm	370 x 210 x 290 mm	444 x 249 x 296 mm	458 x 354 x 417 mm

	305P MkIII	306P MkIII	308P MkIII	310S MkIII
(H x W x D)**	(12.6 x 6.9 x 9.8 in)	(14.6 x 8.3 x 11.4 in)	(17.5 x 9.8 x 11.7 in)	(18 x 13.9 x 16.4 in)
Net Weight	5.3 kg (11.7 lbs)	6.7 kg (14.8 lbs)	8.8 kg (19.4 lbs)	16.9 kg (37.3 lbs)
Shipping Gross Weight	7.3 kg (16.0 lbs)	9.4 kg (20.6 lbs)	12.0 kg (26.3 lbs)	22.8 kg (50.3 lbs)

* Measured in half space, external crossover setting.

** Depth measured without power cord and audio connectors.

Section 12: JBL Service Contact Information

JBL PROFESSIONAL

by HARMAN

MAILING ADDRESS:

JBL Professional

8500 Balboa Blvd.

Northridge, CA 91325

SHIPPING ADDRESS:

Please contact JBL Professional Customer Service for shipping information prior to repairs.

CUSTOMER SERVICE:

Monday through Friday

8:00 AM – 5:00 PM

Pacific Time (U.S.A.)

1-844-776-4899

www.jblproservice.com

PRODUCT REGISTRATION:

Register your product online at www.jblpro.com/registration

WEBSITE:

www.jblpro.com

PROFESSIONAL CONTACTS, OUTSIDE THE USA:

Contact the JBL Professional distributor in your area. A complete list of JBL Professional international distributors is provided at our U.S.A. website: www.jblpro.com

Section 13: Product Warranty Information

The JBL Limited Warranty on professional loudspeaker products (except for enclosures) remains in effect for five years from the date of the first consumer purchase. JBL amplifiers are warranted for three years from the date of original purchase. Enclosures and all other JBL products are warranted for two years from the date of original purchase.

WHO IS PROTECTED BY THIS WARRANTY?

Your JBL Warranty protects the original owner and all subsequent owners so long as: A) Your JBL product has been purchased in the Continental United States, Hawaii, or Alaska. (This Warranty does not apply to JBL products purchased elsewhere except for purchases by military outlets. Other purchasers should contact the local JBL distributor for warranty information.); and B) The original dated bill of sale is presented whenever warranty service is required.

WHAT DOES THE JBL WARRANTY COVER?

Except as specified below, your JBL Warranty covers all defects in material and workmanship. The following are not covered: Damage caused by accident, misuse, abuse, product modification or neglect; damage occurring during shipment; damage resulting from failure to follow instructions contained in your Instruction Manual; damage resulting from the performance of repairs by someone not authorized by JBL; claims based upon any misrepresentations by the seller; any JBL product on which the serial number has been defaced, modified or removed.

WHO PAYS FOR WHAT?

JBL will pay all labor and material expenses for all repairs covered by this warranty. Please be sure to save the original shipping cartons because a charge will be made if replacement cartons are requested. Payment of shipping charges is discussed in the next section of this warranty.

HOW TO OBTAIN WARRANTY PERFORMANCE

If your JBL product ever needs service, contact JBL Professional Customer Service at 1-844-776-4899 or www.jblproservice.com. We may direct you to an authorized JBL Service Agency or ask you to send your unit to the factory for repair. Either way, you'll need to present the original bill of sale to establish the date of purchase. Please do not ship your JBL product to the factory without prior authorization. If transportation of your JBL product presents any unusual difficulties, please advise us and we may make special arrangements with you. Otherwise, you are responsible for transporting your product for repair or arranging for its transportation and for payment of any initial shipping charges. However, we will pay the return shipping charges if repairs are covered by the warranty.

LIMITATION OF IMPLIED WARRANTIES

ALL IMPLIED WARRANTIES, INCLUDING WARRANTIES OF MERCHANTABILITY AND FITNESS FOR PARTICULAR PURPOSE, ARE LIMITED IN DURATION TO THE LENGTH OF THIS WARRANTY.

EXCLUSION OF CERTAIN DAMAGES

JBL'S LIABILITY IS LIMITED TO THE REPAIR OR REPLACEMENT, AT OUR OPTION, OF ANY DEFECTIVE PRODUCT AND SHALL NOT INCLUDE INCIDENTAL OR CONSEQUENTIAL DAMAGES OF ANY KIND. SOME STATES DO NOT ALLOW LIMITATIONS ON HOW LONG AN IMPLIED WARRANTY LASTS AND/OR DO NOT ALLOW THE EXCLUSION OF INCIDENTAL OR CONSEQUENTIAL DAMAGES, SO THE ABOVE LIMITATIONS AND EXCLUSIONS MAY NOT APPLY TO YOU. THIS WARRANTY GIVES YOU SPECIFIC LEGAL RIGHTS, AND YOU MAY ALSO HAVE OTHER RIGHTS, WHICH VARY FROM STATE TO STATE.

JBL Professional

8500 Balboa Boulevard

Northridge, CA 91325 USA